CUSTOMISABLE SKATEBOARD

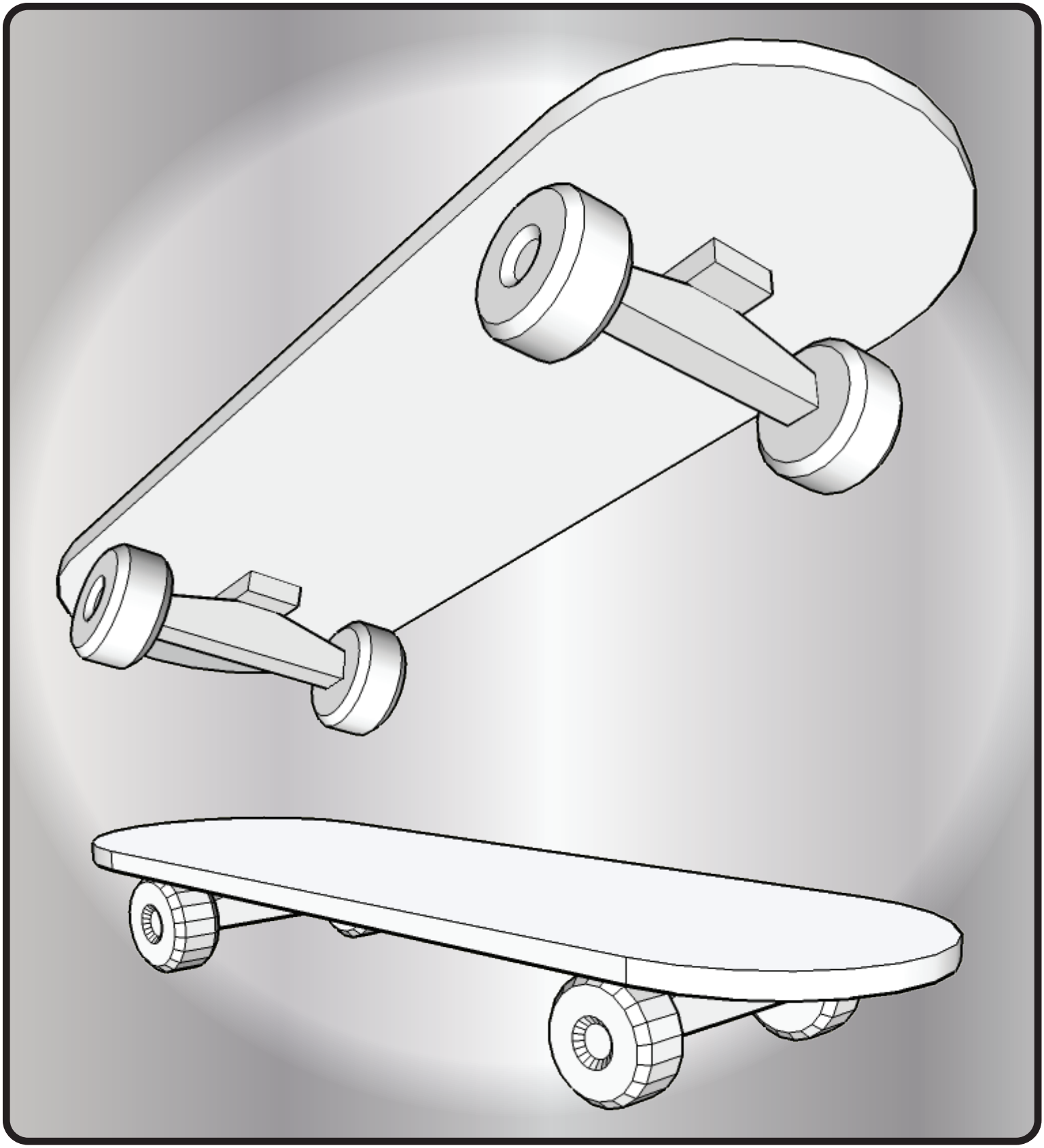

YOU WILL NEED

Scissors
Craft Knife
Tweezers
Glue

Sinner
http://sinner-playingwithart.blogspot.com/

TECHNICS CUSTOM

TOP SIDE

UNDER SIDE



Sinner
http://sinner-playingwithart.blogspot.com/

Please see Instructions before building.

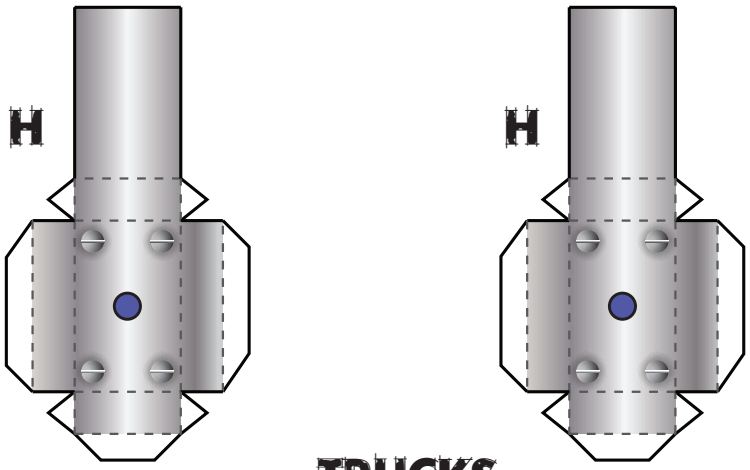

TRUCKS

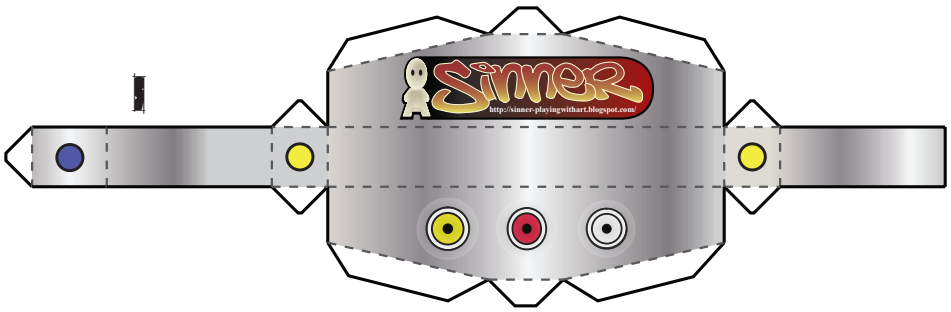

● = Join part I to part H

● = Join to flat side of Wheel (part G)

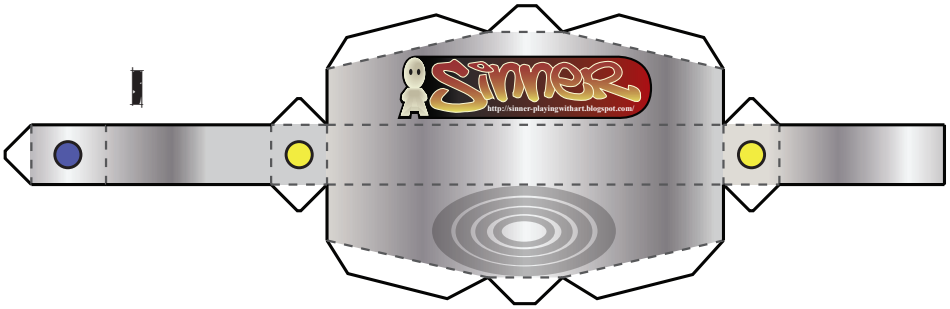

INTERNAL SUPPORTS

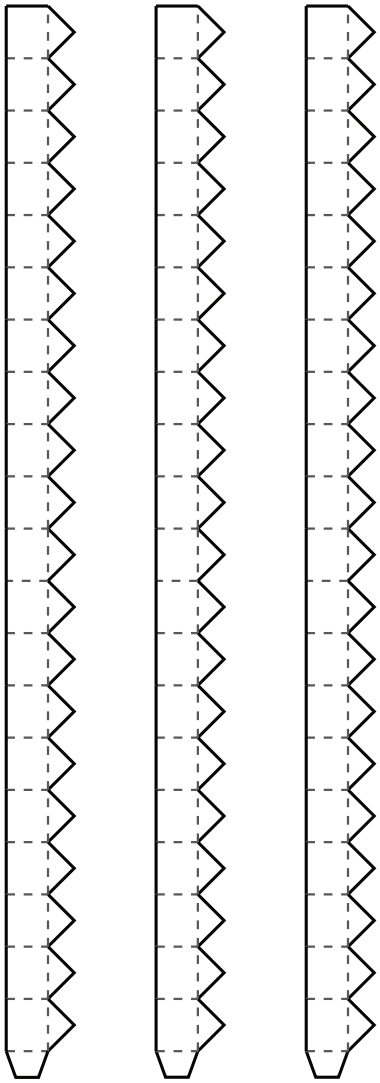

See Diagram

BOARD END-CURVES

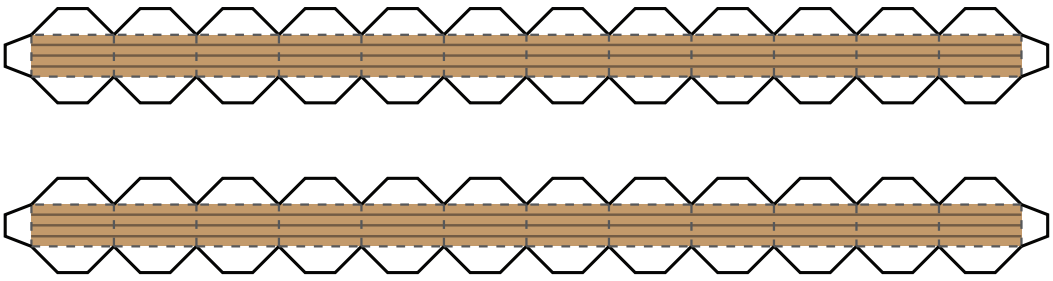

CUSTOMISABLE SKATEBOARD

The wheels can be fiddly to build. Please take your time.
Please see Instructions before building.

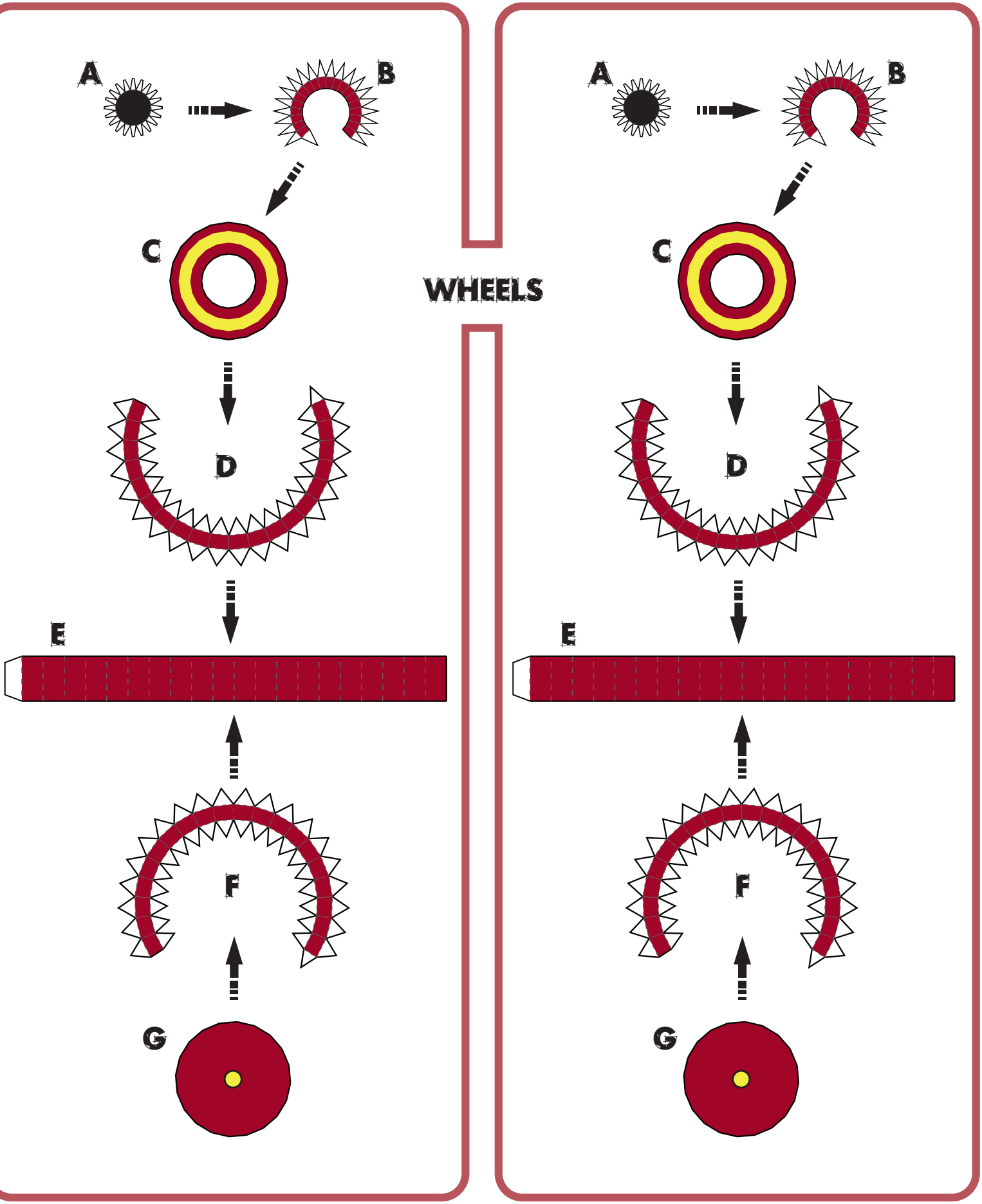



Sinner
http://sinner-playingwithart.blogspot.com/

CUSTOMISABLE SKATEBOARD



The wheels can be fiddly to build. Please take your time.
Please see Instructions before building.

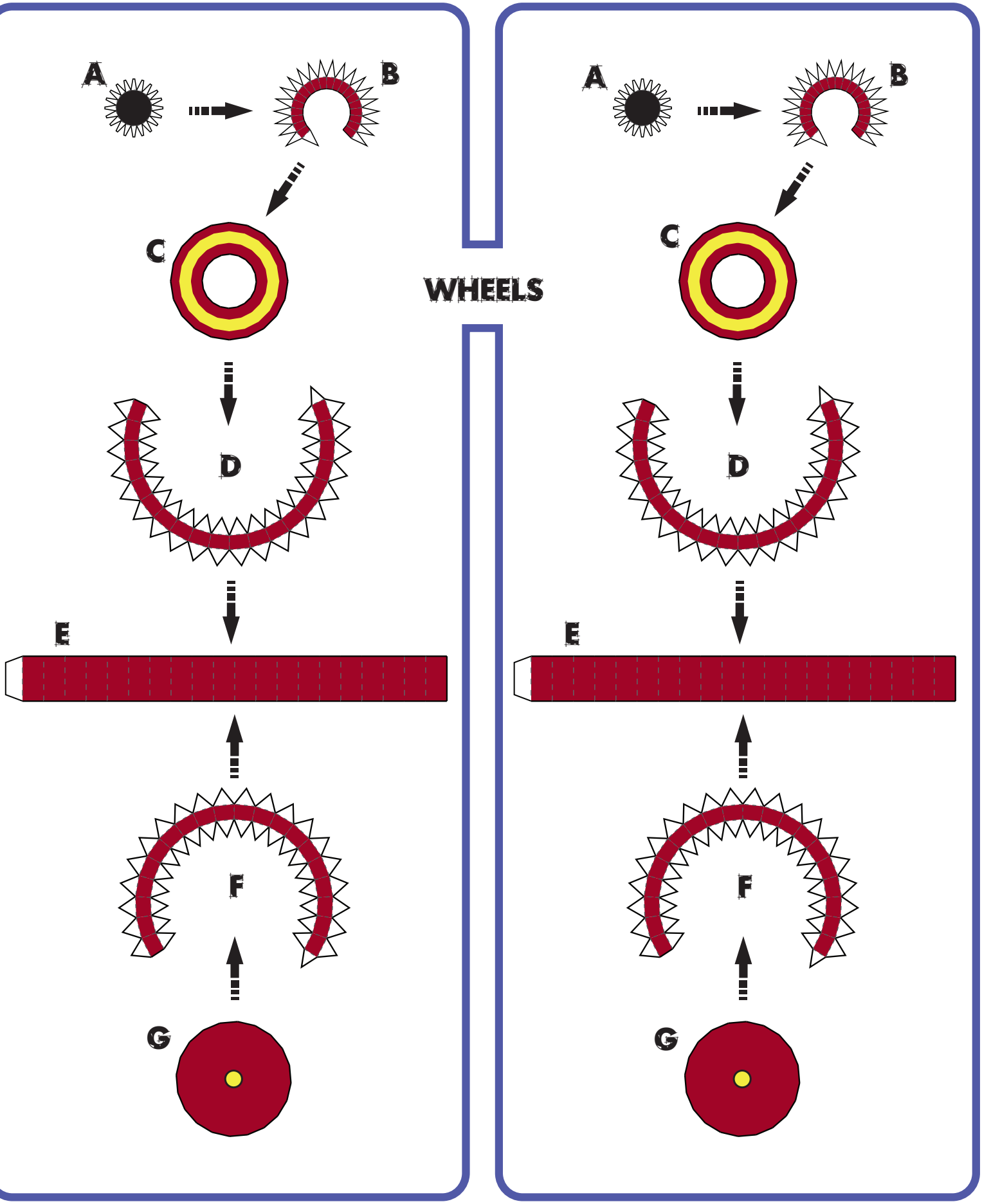



Sinner
http://sinner-playingwithart.blogspot.com/

CUSTOMISABLE SKATEBOARD



CUSTOMISABLE SKATEBOARD

WHEEL & TRUCK INSTRUCTIONS

Carefully use a Craft Knife to cut out the small pieces.
Try to press the blade through the paper when cutting Tabs, dragging it can sometimes pull off the Tab also.

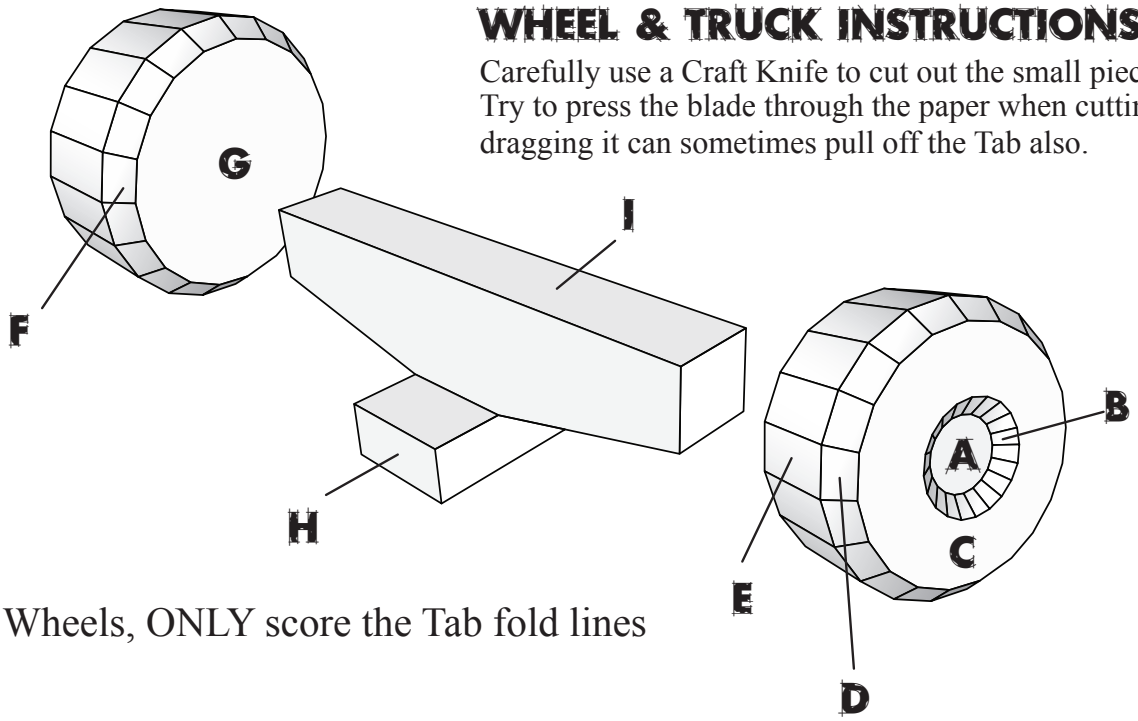

On the Wheels, ONLY score the Tab fold lines

CONSTRUCTING THE BOARD

When constructing the Board, Score the long edges & Fold well. Bend the Board end curves, & attach to the inside face of the Underside Panel. Glue the edges of the curves to the long sides of the board. Add the Internal Supports (See Below). When the edge is completely built & dry, Fold down the top panel & work your way round the Tabs to close the model.

INTERNAL SUPPORTS DIAGRAM

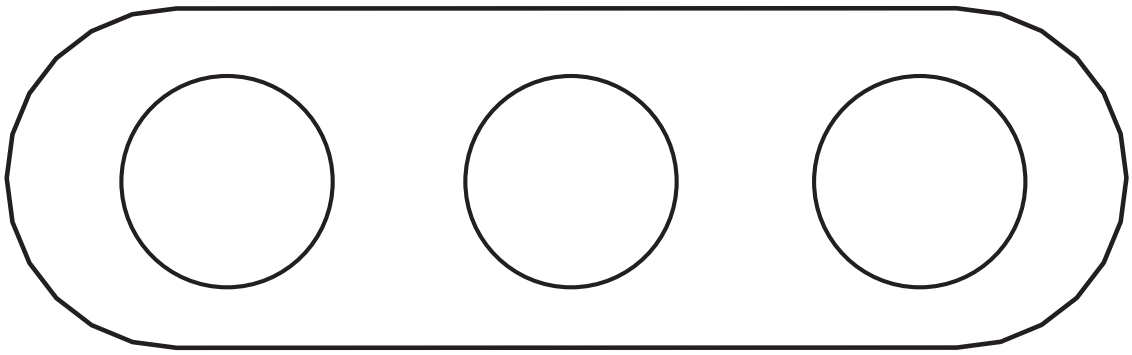

Glue the Internal supports to the inside face of the Underside section. 1 in the middle, & the other 2 at the same point as the Trucks on the outside face.